RABUGGI

Ignition Switch Lever/Knob/Rod
07-31-16 R.A.B.
rev. 05-27-22 R.A.B.
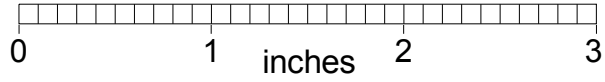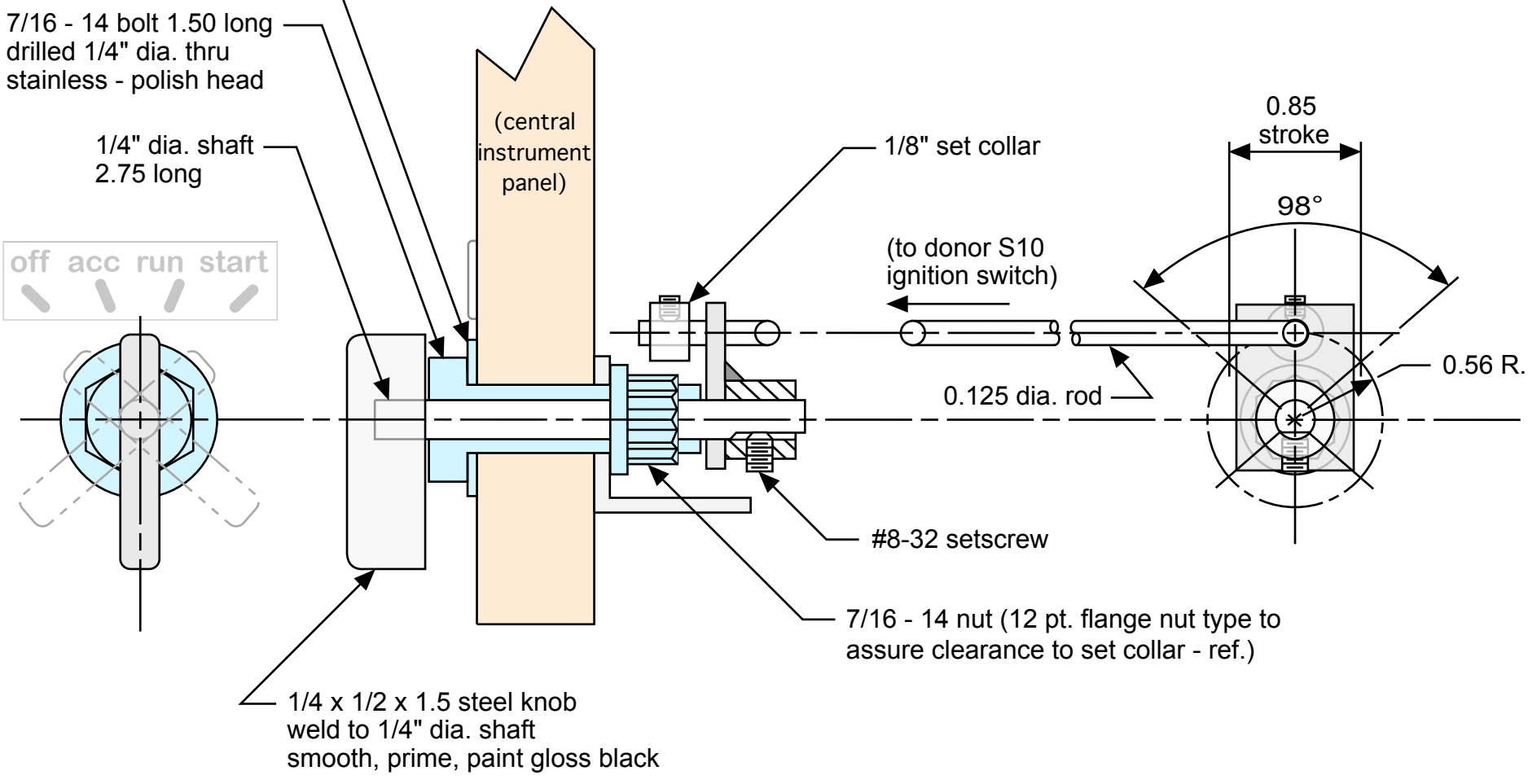
scale = full